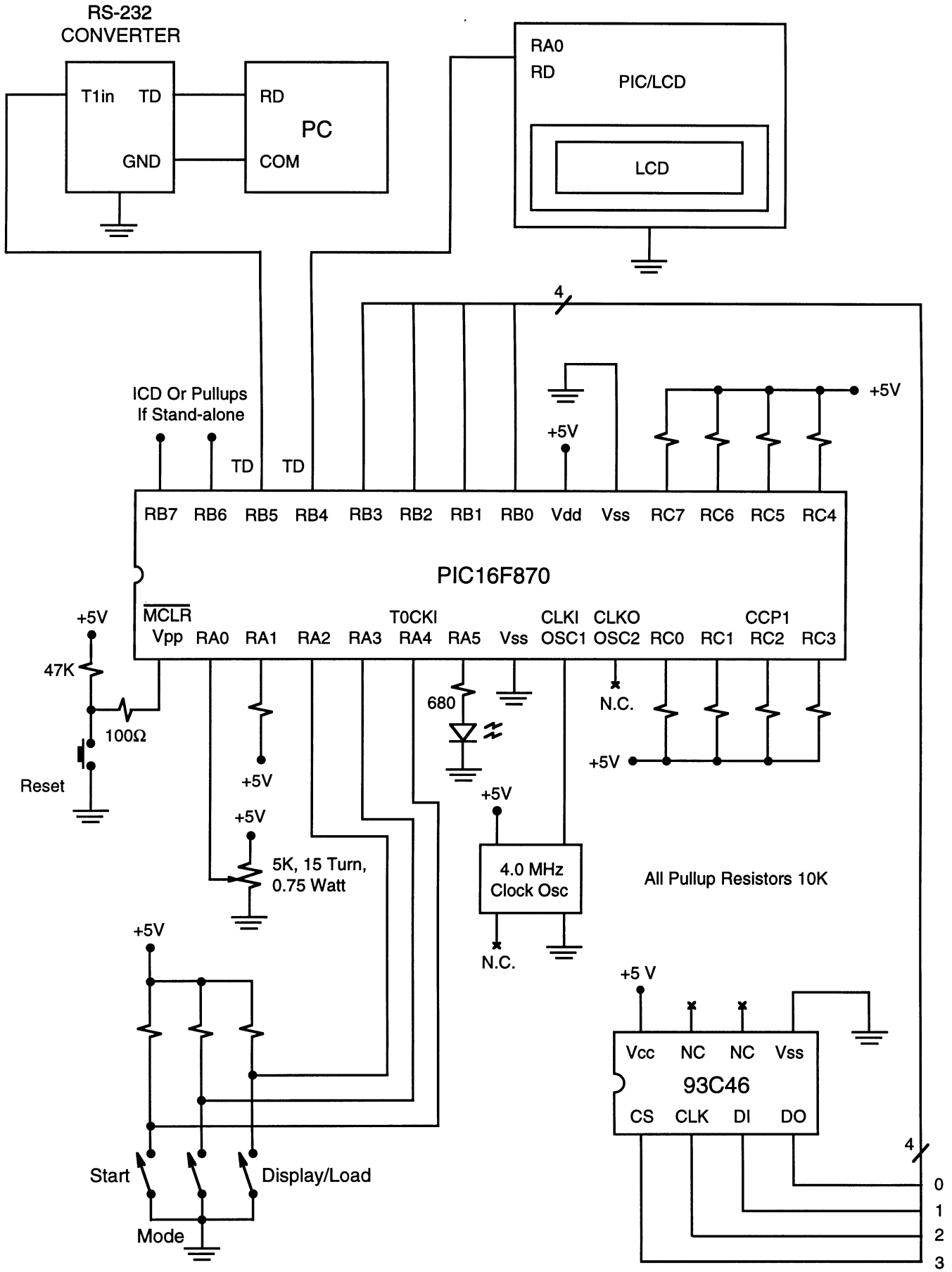
RS-232
CONVERTER
T1in
TD
GND
RD
PC
COM
RA0
RD
PIC/LCD
LCD
4
ICD Or Pullups
If Stand-alone
TD
TD
+5V
+5V
RB7 RB6 RB5 RB4 RB3 RB2 RB1 RB0 Vdd Vss RC7 RC6 RC5 RC4
PIC16F870
MCLR
Vpp RA0 RA1 RA2 RA3 T0CKI RA4 RA5 Vss CLKI OSC1 CLKO OSC2 RC0 RC1 CCP1 RC2 RC3
+5V
47K
100Ω
Reset
680
N.C.
+5V
+5V
+5V
5K, 15 Turn,
0.75 Watt
+5V
4.0 MHz
Clock Osc
N.C.
All Pullup Resistors 10K
+5V
+5 V
Vcc NC NC Vss
93C46
CS CLK DI DO
4
0
1
2
3
Start
Display/Load
Mode